Application Guide
Thunder 1500HD

Purpose

This document is meant to guide the user to determine the size, capacity, and performance of a machine using the Thunder 1500HD drives. Approximate minimum dimensions are shown. Larger machines are possible.

Applications

- Heavy AMRs / AGVs
  - Delivery robots
  - Surveillance robots
  - Defense platforms
  - Agricultural robots
- Commercial mowers
  - Zero turn
  - Ride on
  - Autonomous
- Landscaping vehicles
  - Mini excavators
  - Skid steer loaders
  - Wheelbarrows
  - Turf equipment
- Outdoor power equipment
  - Snow blowers
  - Sprayers
  - Spreaders
- Utility vehicles
- Mobile equipment
- Personnel carriers
- Tuggers

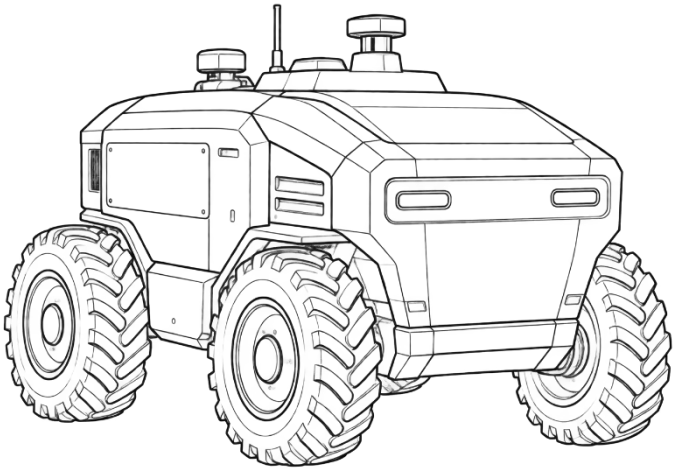

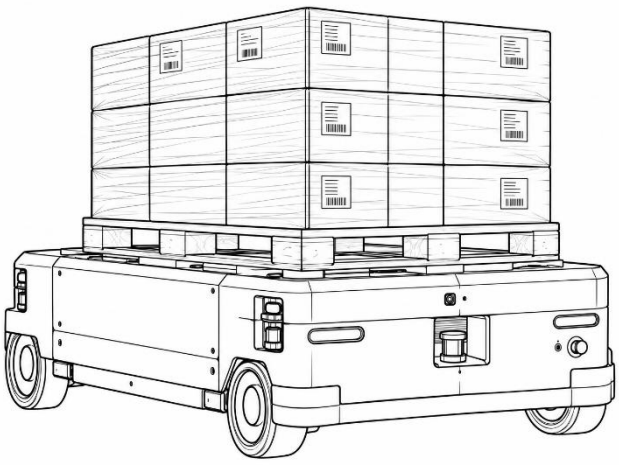

209 Progress Drive Montgomeryville, PA 18936 (215) 661-1002 | ASIdrives.com

Quick Performance Reference

Application	Wheel Size	Ratio	Drives per vehicle	Gross Vehicle Weight, lb [kg]	MAX Vehicle Speed*, mph [kph]	MAX Grade, %
AMR / AGV	12 in [305 mm]	21:1	2	4800 [2180]	5.7 [9.2]	10
			4	9600 [4360]	5.7 [9.2]	
			6	14400 [6540]	5.7 [9.2]	
		31:1	2	7000 [3175]	3.8 [6.1]	
			4	14000 [6350]	3.8 [6.1]	
			6	21000 [9525]	3.8 [6.1]	
Utility Vehicle	15 in [380 mm]	21:1	2	2200 [1000]	7.1 [11.4]	20
			4	4400 [2000]	7.1 [11.4]	
			6	6600 [3000]	7.1 [11.4]	
		31:1	2	3200 [1450]	4.8 [7.7]	
			4	6400 [2900]	4.8 [7.7]	
			6	9600 [4350]	4.8 [7.7]	
Mower	18 in [460 mm]	21:1	2	1500 [680]	8.5 [13.7]	25
			4	3000 [1360]	8.5 [13.7]	
			6	4500 [2040]	8.5 [13.7]	
		31:1	2	2200 [1000]	5.7 [9.2]	
			4	4400 [2000]	5.7 [9.2]	
			6	6600 [3000]	5.7 [9.2]	
Off-Road	23 in [585 mm]	21:1	2	1000 [450]	10.9 [17.5]	30
			4	2000 [900]	10.9 [17.5]	
			6	3000 [1350]	10.9 [17.5]	
		31:1	2	1500 [680]	7.3 [11.7]	
			4	3000 [1360]	7.3 [11.7]	
			6	4500 [2040]	7.3 [11.7]	

* Max speed is taken on flat (0% grade) ground

Note: Performance ratings assume even loading of all drives and are based on S2-60-minute load ratings and MAX grade. Reduced duty cycle or operation on flat ground can lead to significant increases in gross vehicle weight capacity.

209 Progress Drive Montgomeryville, PA 18936 (215) 661-1002 | ASIdrives.com

Typical Drive Mounting Dimensions

Dimensions in inches [millimeters]

Mirrored Configuration

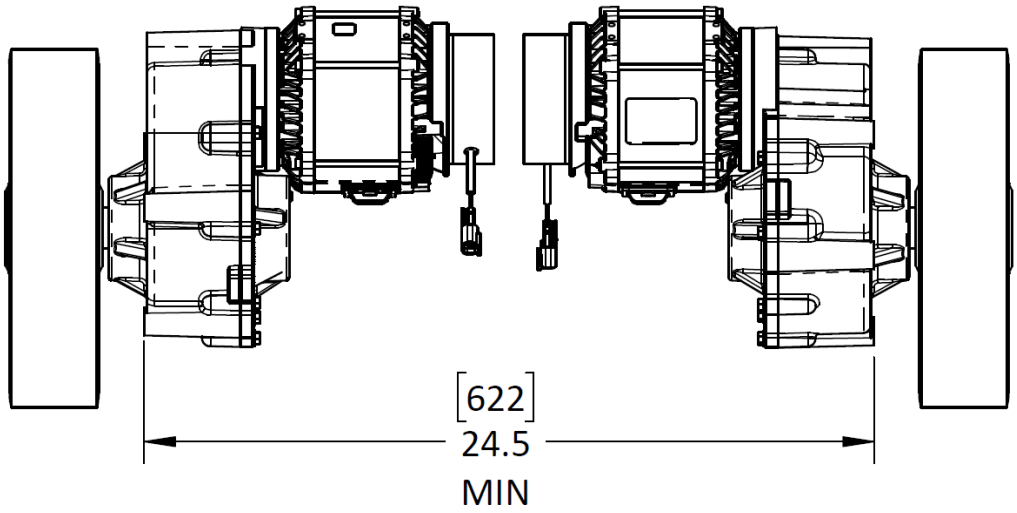

Nested Configuration

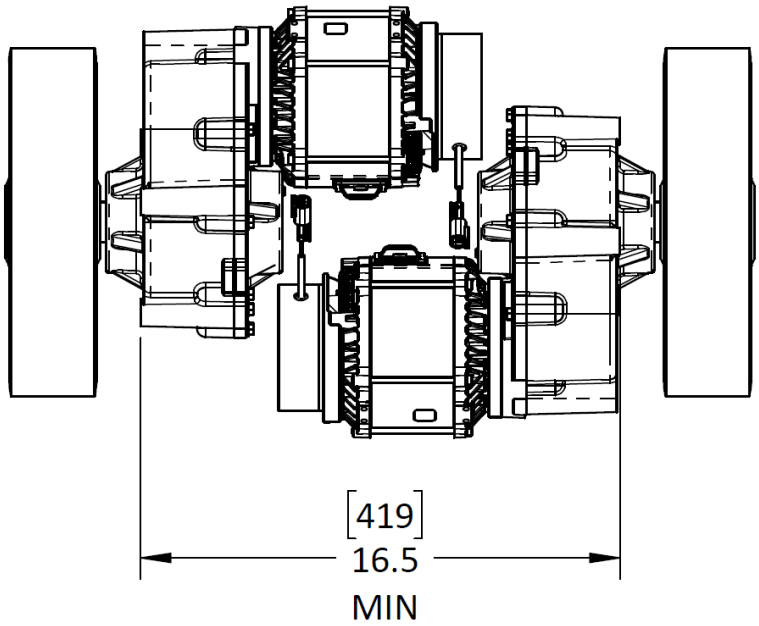

Note: Radial drive orientation is not critical. Both configurations will work with a range of mounting orientations.

209 Progress Drive Montgomeryville, PA 18936 (215) 661-1002 | ASIdrives.com

Vehicle Construction Examples (viewed from the top)

Dimensions in inches [millimeters]

Differential Steer

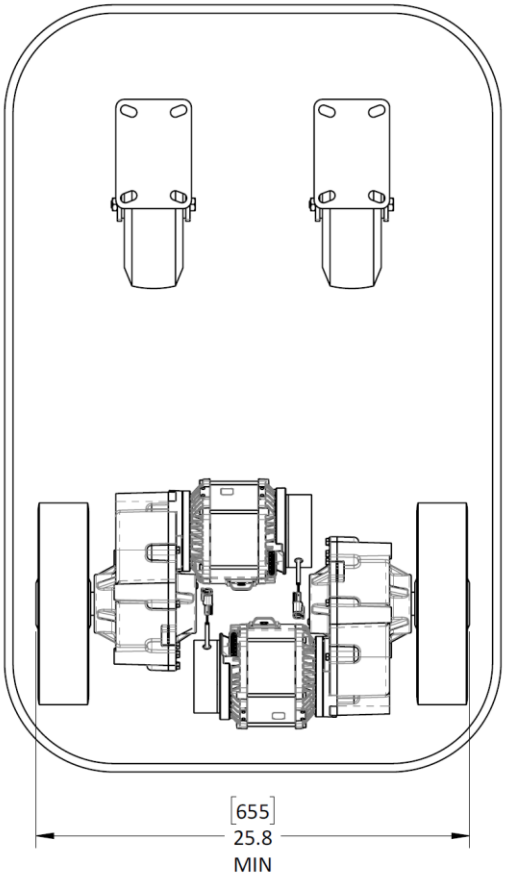

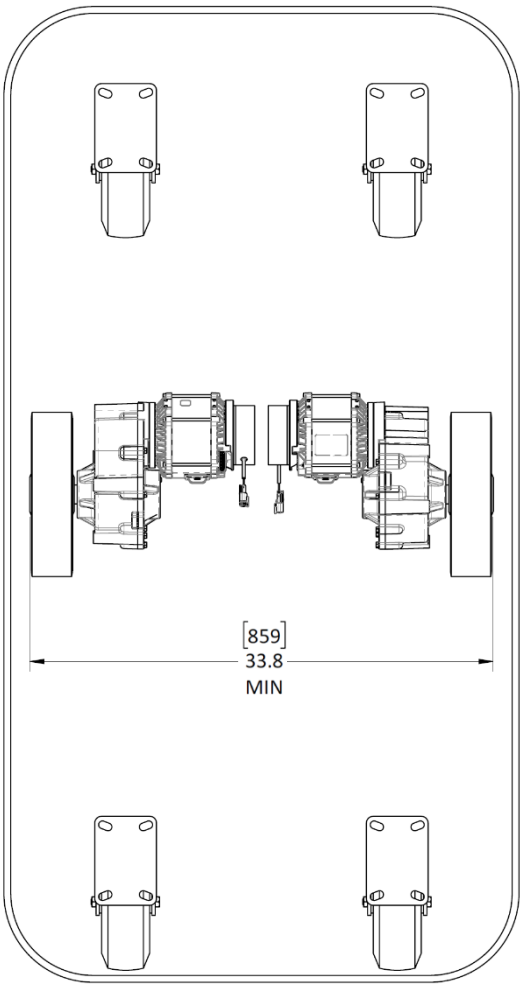

Differential drivetrains place a wheel drive on each side of the vehicle with additional supporting caster wheel(s). This arrangement takes advantage of the caster wheels to minimize the scrubbing and spread the load among non-driven wheels.

With only 2 powered wheels on the vehicle, it is critical that those 2 wheels always maintain solid contact with the ground. A differential drivetrain may lose traction on uneven floors and transitions on and off ramps.

Differential drivetrains are a great solution for: Indoor, smooth floors, high load, burden carrying, tunneling, and towing applications.

209 Progress Drive Montgomeryville, PA 18936 (215) 661-1002 | ASIdrives.com

Skid Steer

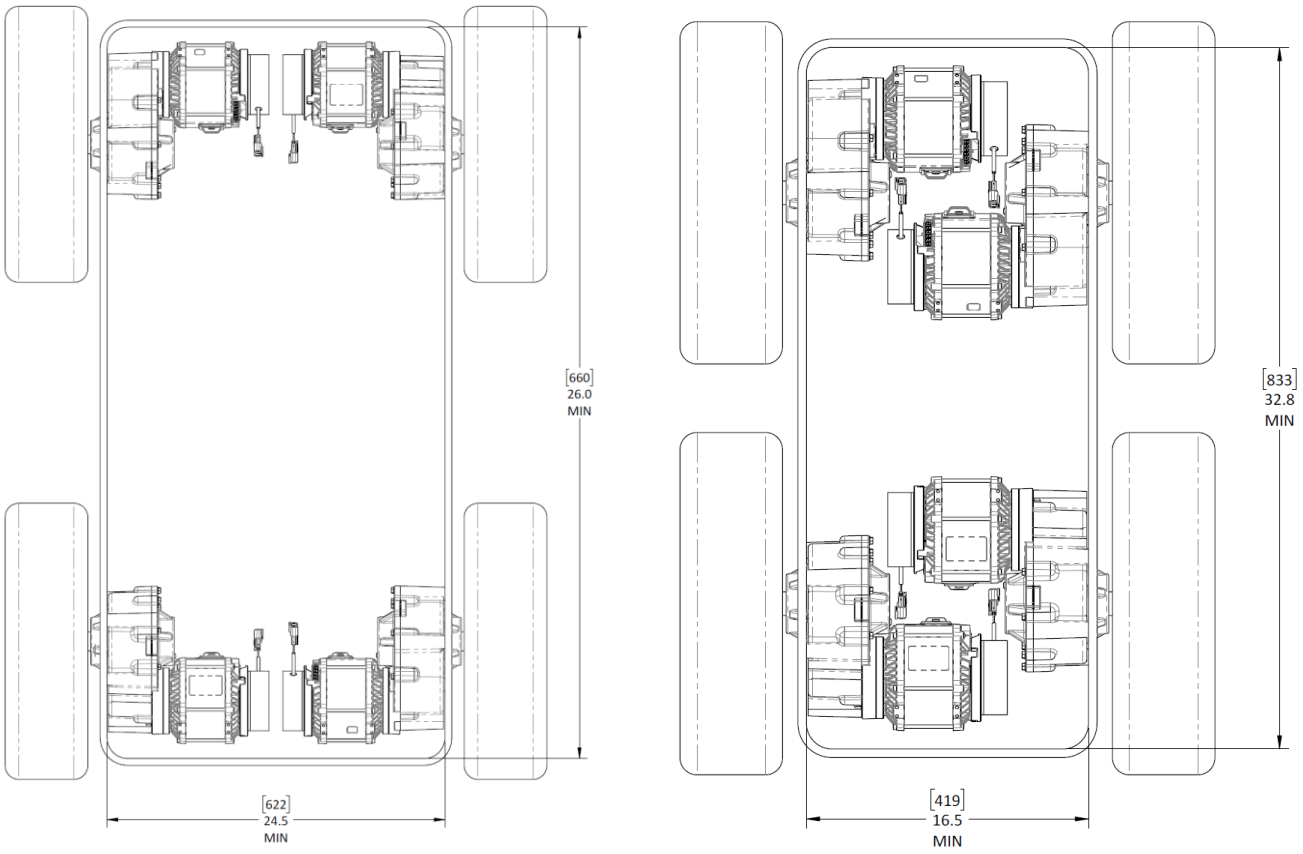

Skid steer places a wheel drive in all 4 corners of the machine. With 4 powered wheels, machines that use this concept minimize issues with traction. This method provides the exceptional power and load capacity of 4-wheel drives and is simple to control.

When turning, skid steer drivetrains will cause wheel scrub. This can cause turning to be a very power intensive movement, especially in vehicles with long wheelbases and narrow track widths.

Skid steer drivetrains are a great solution for: Outdoor, offroad, high load, burden carrying, mecanum, and ramped applications

209 Progress Drive Montgomeryville, PA 18936 (215) 661-1002 | ASIdrives.com

Ackermann Steering

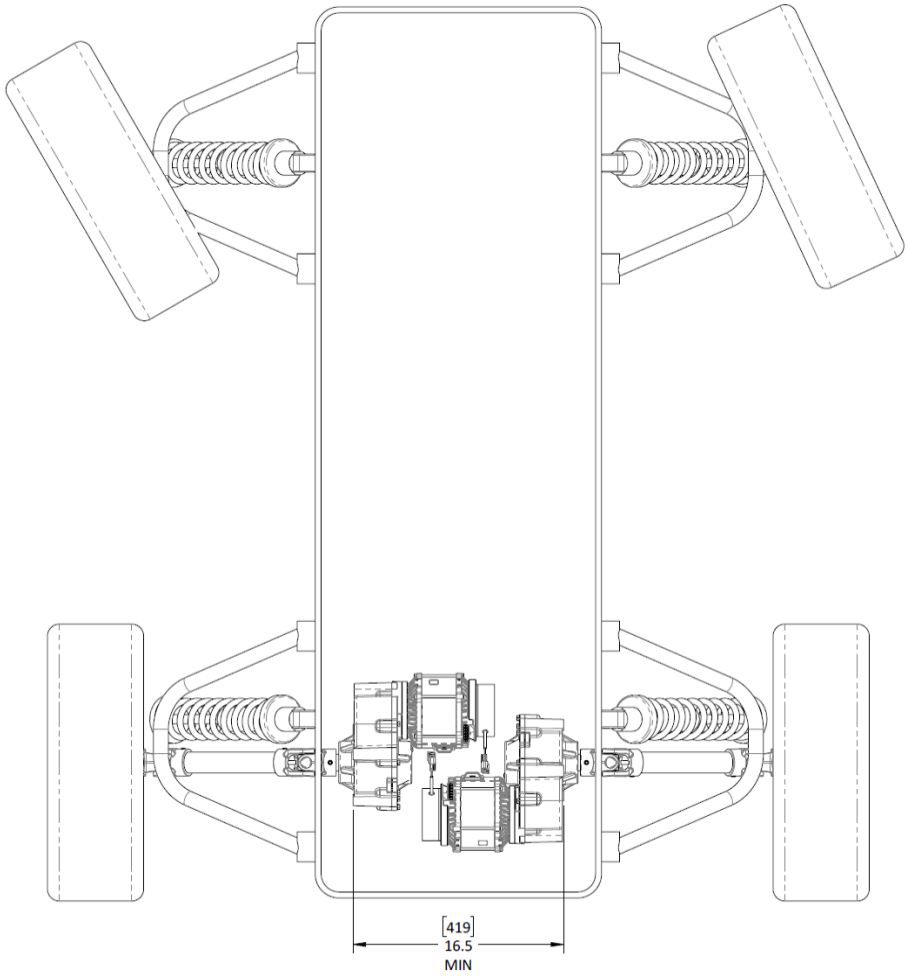

Ackermann steering works like a typical automobile. Front, rear, or 4-wheel drive is possible. The front wheels pivot to change the turning radius of the vehicle. This greatly reduces tire wear and improves turning efficiency.

Ackermann vehicles cannot perform 0 point turns and work best when driving predominantly forward. Additional mechanisms are required to control the steer wheels.

Ackermann drivetrains are a great solution for: Outdoor, offroad, high speed, unidirectional, or ramped applications

209 Progress Drive Montgomeryville, PA 18936 (215) 661-1002 | ASIdrives.com

Suspension Examples (viewed from the front/rear)

Dimensions in inches [millimeters]

Rigid – Smooth, flat, indoor applications

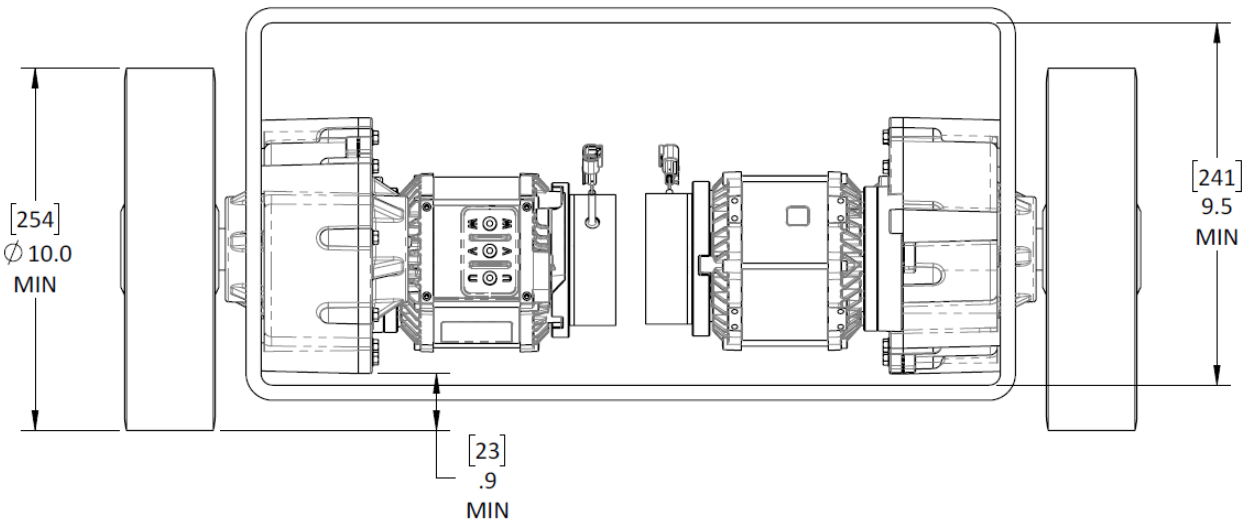

Sprung – Most outdoor applications

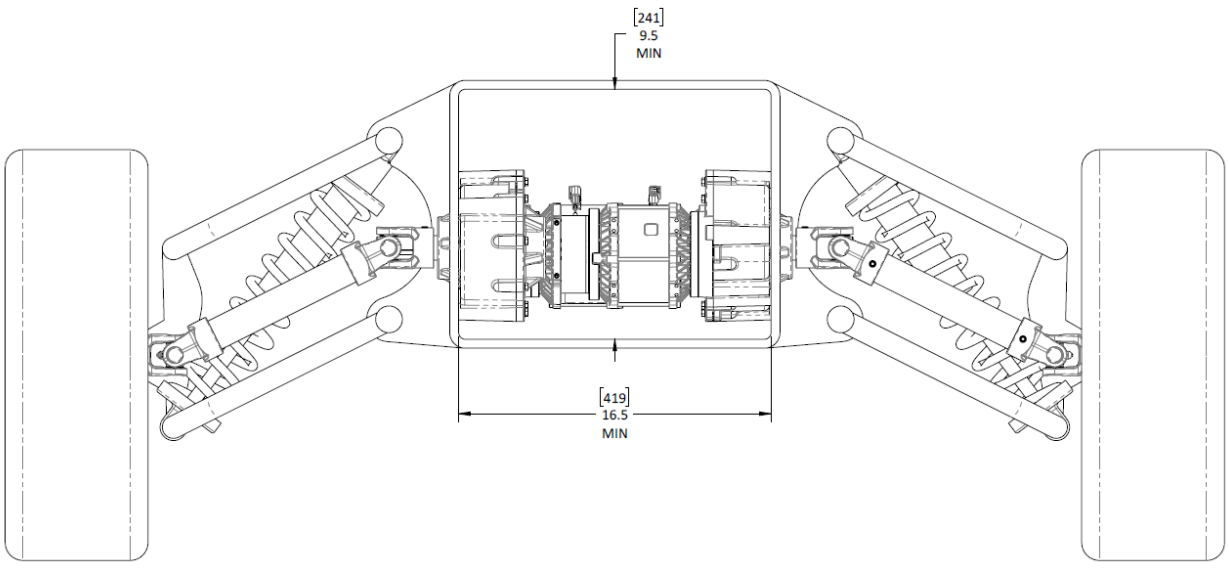

209 Progress Drive Montgomeryville, PA 18936 (215) 661-1002 | ASIdrives.com

Unsprung – Low-speed outdoor applications

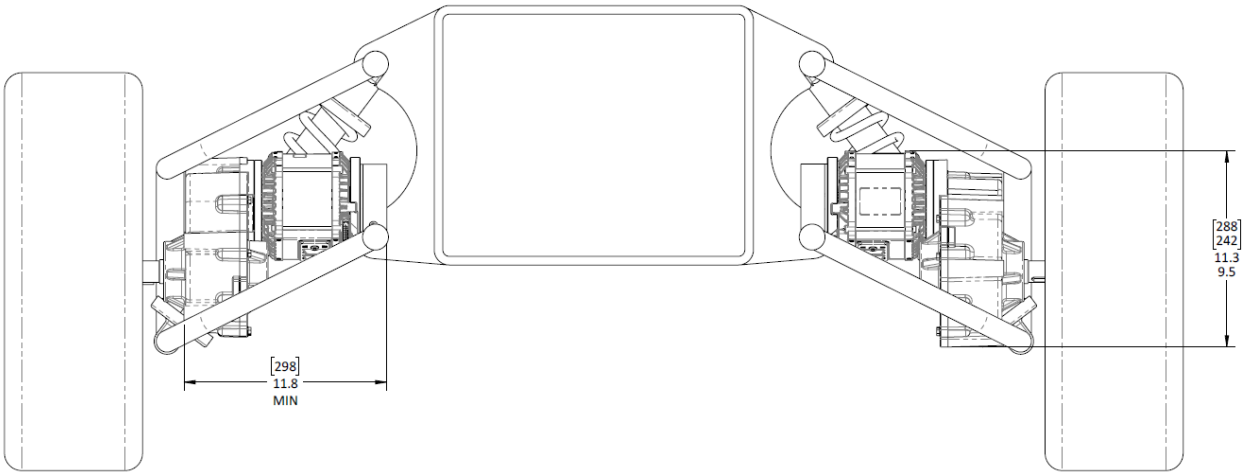

Note: Any combination of vehicle construction, drive orientation, and suspension can be used. Common examples are provided for demonstration purposes only

209 Progress Drive Montgomeryville, PA 18936 (215) 661-1002 | ASIdrives.com

Thunder 1500 HD

Description

The **THUNDER 1500HD** is a heavy duty IPM motor drive engineered for demanding material handling and mobility applications. Its rugged, sealed construction supports outdoor operation, while the dual-stage helical gearing delivers smooth, reliable torque for moving heavy loads. With a high-performance interior permanent magnet motor and hardened gear train, the THUNDER 1500HD offers lasting strength, durability, and precision.

Features

- Complete high-performance wheel drive solution
  - Rated power: 3.5 kW
- Fully integrated package
  - Sealed outdoor-rated design (IP 67 intent)
  - Power-off Electromagnetic parking brake
  - IPM brushless motor (PMAC)
  - Internal Sin/Cos Encoder
  - Internal thermal sensor for motor protection
- Multiple gear ratios available

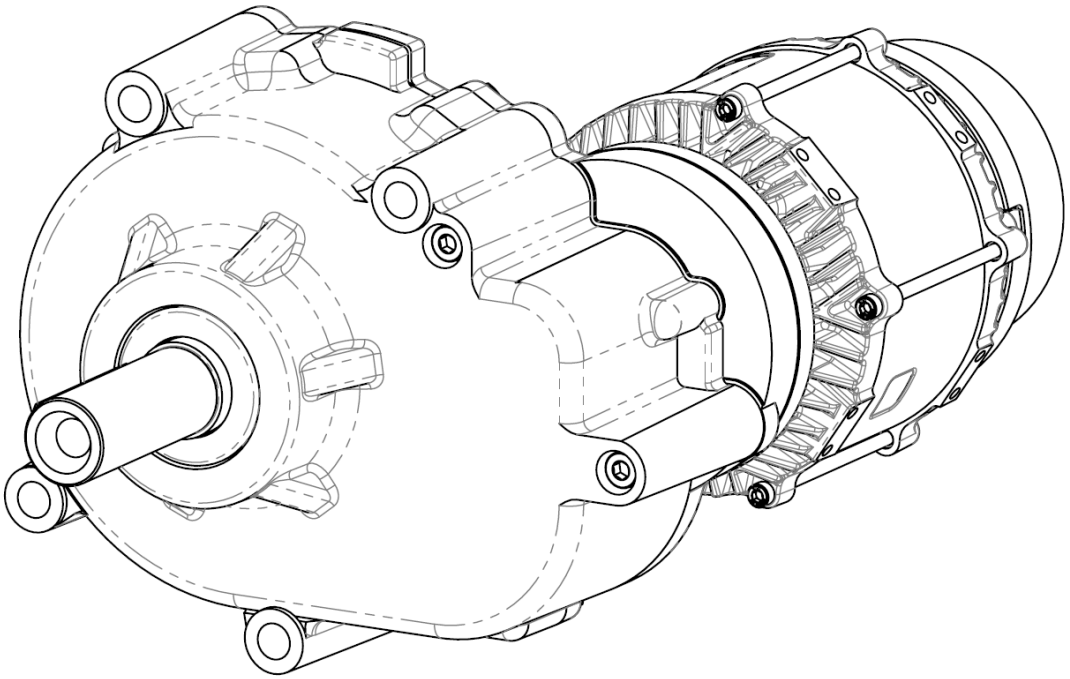

209 Progress Drive Montgomeryville, PA 18936

(215) 661-1002 | ASIdrives.com

Specs and Ratings

Motor Ratings

Parameter	Value
Motor type	IPM Brushless (PMAC)
Nominal voltage	48 V
Rated speed	3500 rpm
Rated power (S2-60 min)	3.5 kW
IP rating	IP 67
Material thermal class	Class H
Motor thermal class	Class F
Pole Pairs	5
Rotor Inertia	1312 $kgmm^2$
Power wire interface	M6 ring terminal
Ambient temp range	-15 to 40 ˚C
Torque constant	0.15 Nm/A
Back EMF constant	9.2 V_{RMS}/kRPM
Field weakening capable	Yes
Maximum motor speed	7000 rpm

Brake Ratings

Parameter	Value
Brake type	Electromagnetic power-off parking brake
Brake holding torque	12 Nm MIN @ Motor 251 Nm MIN @ 21:1 Output 371 Nm MIN @ 31:1 Output
Nominal voltage	24 V
Power draw	14.5 W
IP rating	IP 67
Connector type	Deutsch DTM 04-2P

Gearbox Ratios

Ratio	Actual reduction	Output no load speed
High Speed (21:1)	(59/10) X (39/11)	168 rpm
High Torque (31:1)	(59/10) X (42/8)	113 rpm

Gearbox Ratings

Parameter	Value
Output shaft radial load	2000 lbs [907 kgs]

Position and Thermal Sensor Ratings

Parameter	Value	Description
Position sensor	Sin/Cos	Sin/Cos output 1-4V
Cycles per revolution	5	One sin/cos cycle per electrical revolution
Thermal sensor type	PT1000	Embedded in stator winding

Encoder Pinout

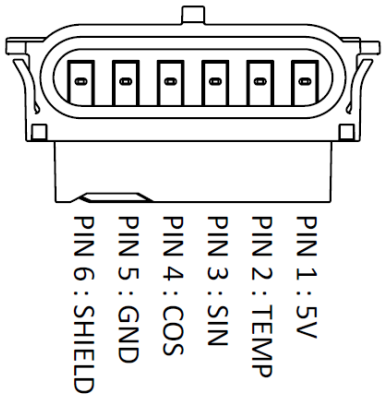

Encoder socket: SuperSeal 1.5 Socket
Mating plug P/N: 282090-1
Mating pin P/N: 183035-1

Pin	Function
1	5V
2	Temp
3	Sin
4	Cos
5	GND
6	Shield

Motor Pinout

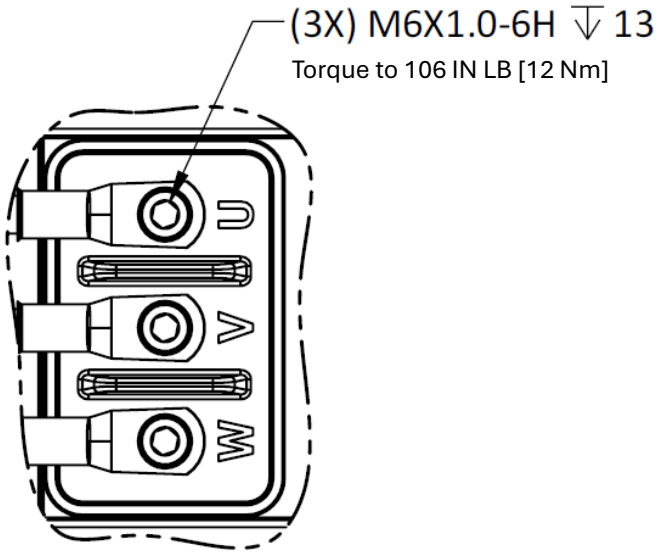

209 Progress Drive Montgomeryville, PA 18936
(215) 661-1002 | ASIdrives.com

Performance

High Torque (31:1 ratio)

Duty Type	S2-2min	S2-10Min	S2-30min	S2-60min
Torque, Nm	883	589	368	282
Power, kW	2.98	5.97	4.97	3.34
Speed, RPM	32	97	129	113
Efficiency, %	58	81	86	88
Phase Current, Amps	200	140	100	65
Stator Frequency, Hz	83	250	333	292

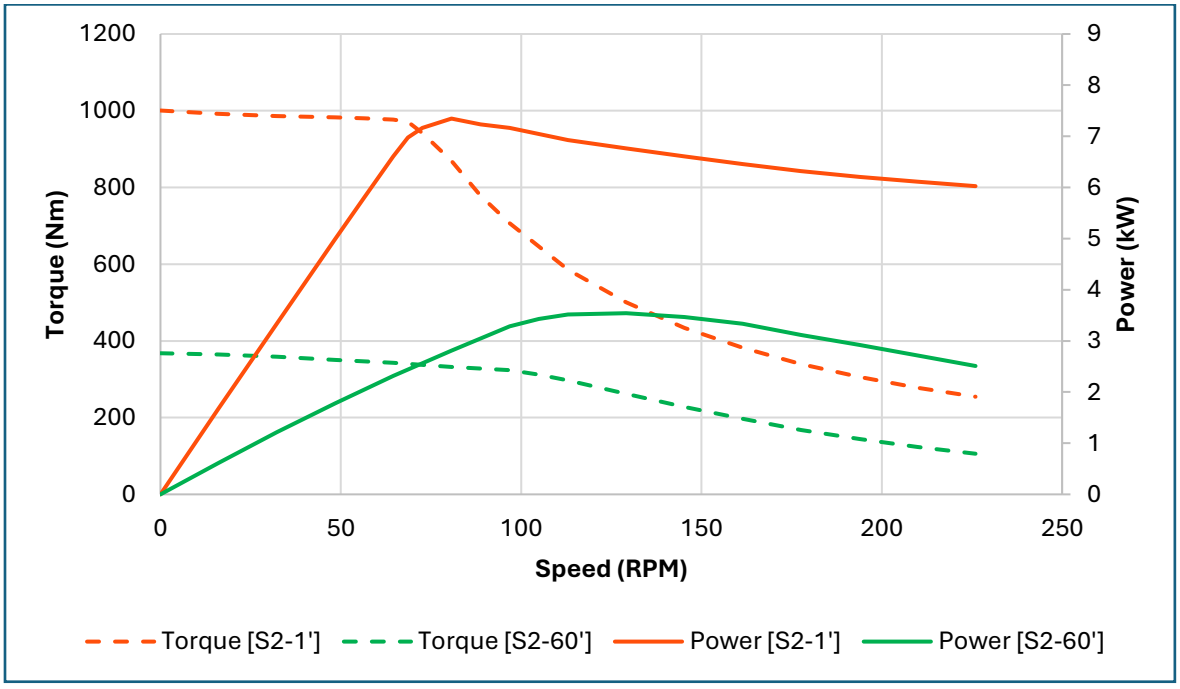

209 Progress Drive Montgomeryville, PA 18936 (215) 661-1002 | ASIdrives.com

High Speed (21:1 ratio)

Duty Type	S2-2min	S2-10Min	S2-30min	S2-60min
Torque, Nm	596	397	248	191
Power, kW	2.98	5.97	4.97	3.34
Speed, RPM	48	143	191	167
Efficiency, %	58	81	86	88
Phase Current, Amps	200	140	100	65
Stator Frequency, Hz	83	250	333	292

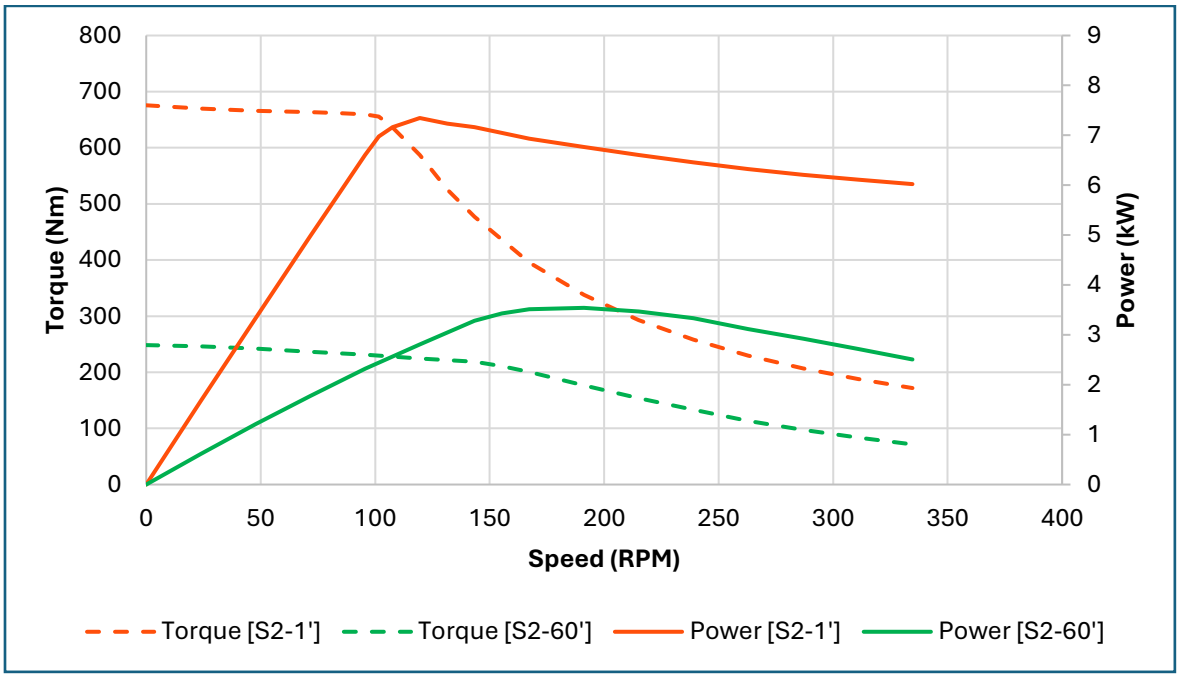

209 Progress Drive Montgomeryville, PA 18936
(215) 661-1002 | ASIdrives.com

Mechanical drawings

Dimensions in inches [millimeters]

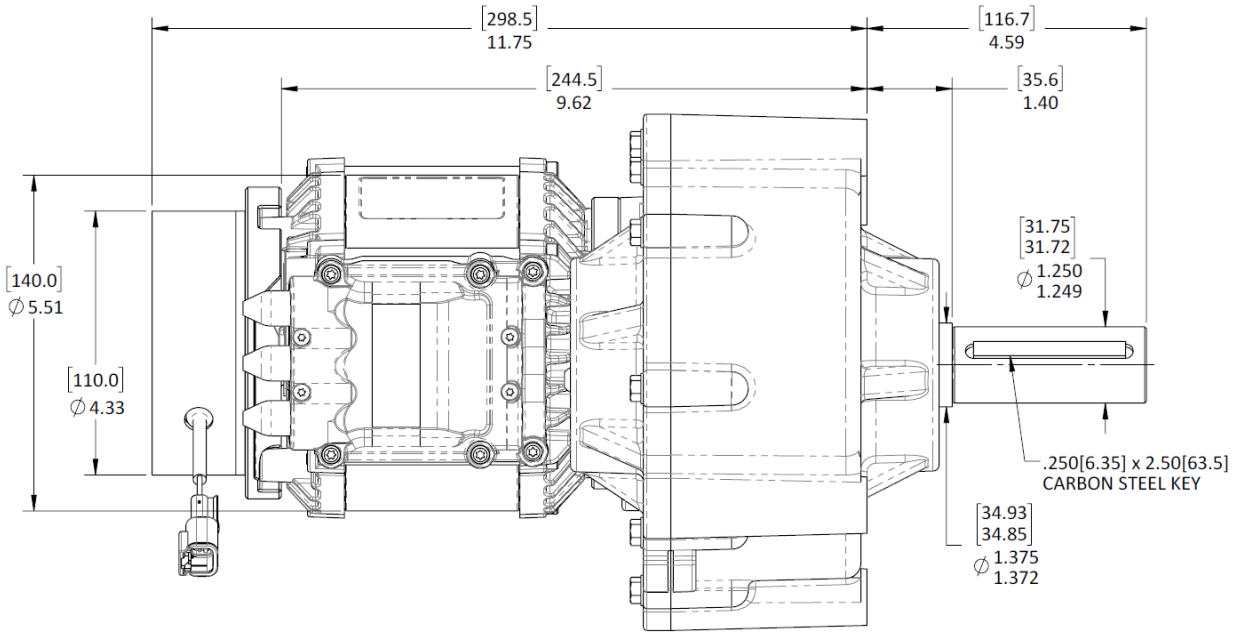

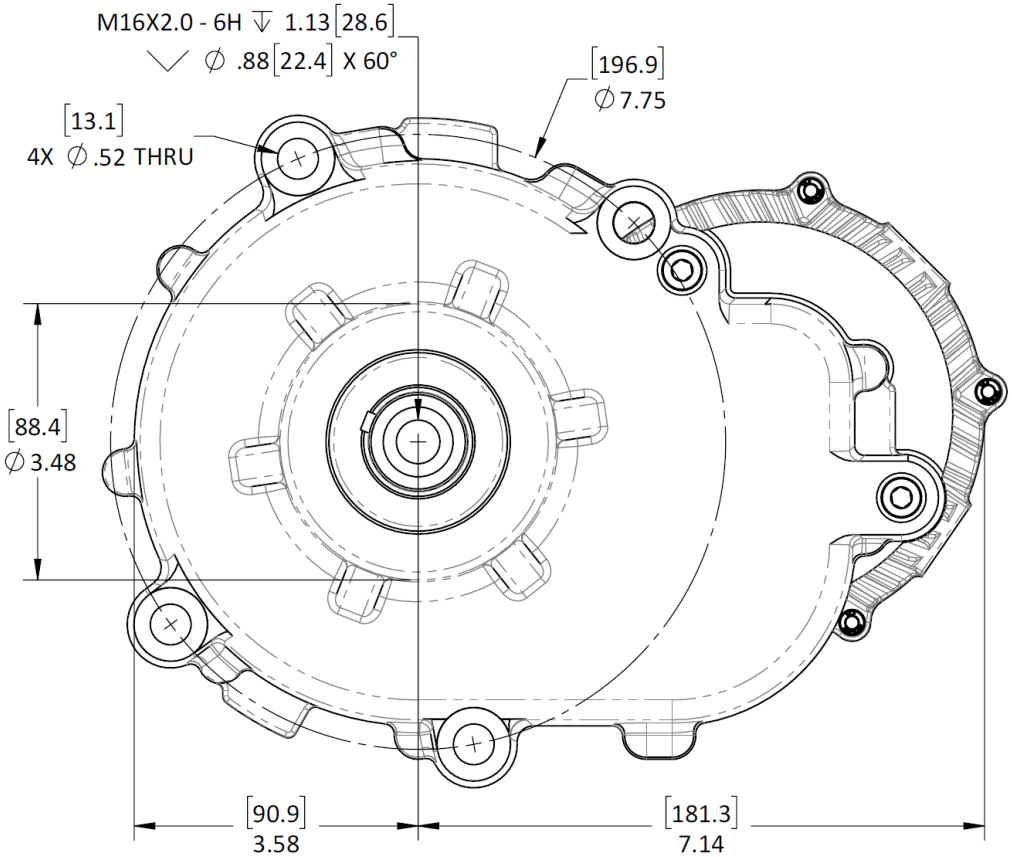

209 Progress Drive Montgomeryville, PA 18936 (215) 661-1002 | ASIdrives.com

Index

Purpose 1

Applications 1

Quick Performance Reference 2

Typical Drive Mounting Dimensions 3

Vehicle Construction Examples (viewed from the top) 4

Suspension Examples (viewed from the front/rear) 7

Description 9

Features 9

Specs and Ratings 10

Performance 12

Mechanical drawings 14